wolf
PRODUKTIONSSYSTEME

Laser Processing

- Laser Plastic Welding
- Laser Welding of Metals
- Laser Marking

Table of Contents

- Laser plastic welding from page 04
- Micro welding of metals from page 09
- Laser marking from page 12
- Process verification from page 16
- Machine technology from page 17
- Service from page 21

Laser Processing

Introduction

Laser radiation is monochromatic, coherent, can spread almost parallel and can therefore be extremely well focussed, so that high beam intensities are possible over the smallest of cross-sections.
Depending on the wavelength and energy density, a widely varying interaction with materials is possible.

This interaction is also dependent on the selected pulse frequency and pulse energy.

The possibilities of laser processing are diverse and complex, and are delivered using an increasingly wide range of different laser types and systems.

Laser wavelengths

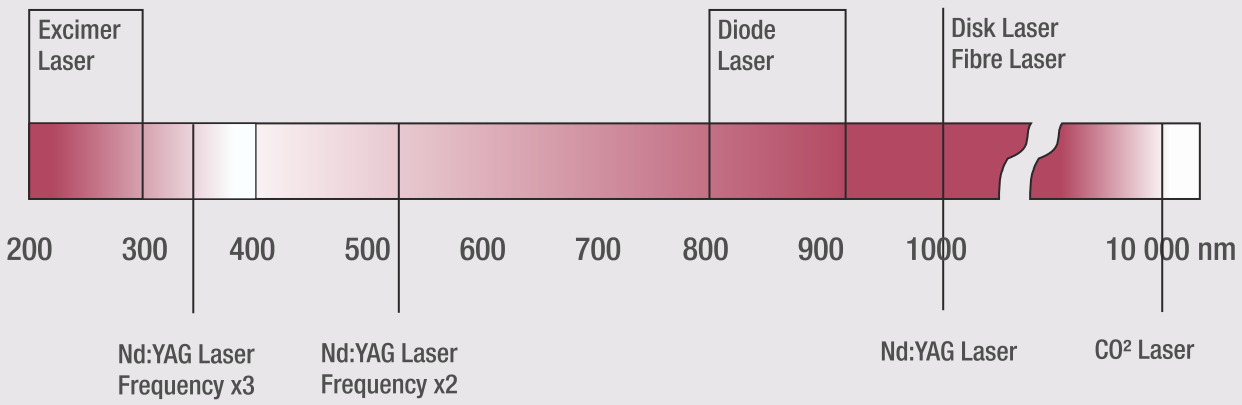

Our Focuses

Laser processing is hugely versatile. Its applications range from welding 30 mm sheet steel in shipbuilding, right to the micro-structuring of silicon within a nanometre range.
Wolf Produktionssysteme specialises in the processes:

- Laser plastic welding
- Laser welding of metals and
- Laser marking

Our machines are used in industrial series production with typical workpiece sizes smaller than a shoe box.

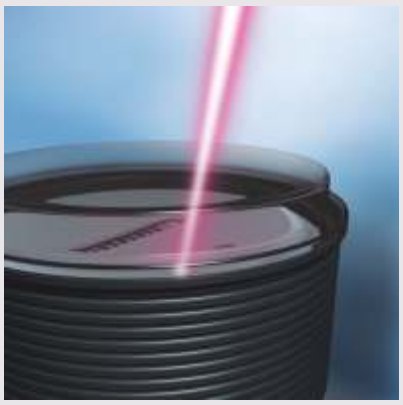

Laser plastic welding

Laser welding of metals

Laser marking

Laser Plastic Welding

Principle

With plastic welding, the parts to be joined are usually overlapped and transmission welded.
With overlap welding, it is possible to attain welding seam strengths largely equal to the basic material strength, with very small melting zones and a low energy input.

With this method, the laser beam is emitted through the top joining part and is absorbed by the surface of the bottom joining part. This results in the absorbing part melting.

Due to the surface contact between the parts to be joined, which are pressed together, the laser-transparent joining part is also melted on a very limited, localised basis.
If appropriate contact pressure is exerted on the joining parts, the thermal expansion of the melt - which can be up to 30% - results in a through-mix of the molecular chains inside the melting zone.

With butt joint welding, both joining parts must be equally laser-absorbent. The joining parts are heated on a targeted basis at the seam by the laser beam, and the material is melted. Appropriate contact pressure is also required between the joining parts here.

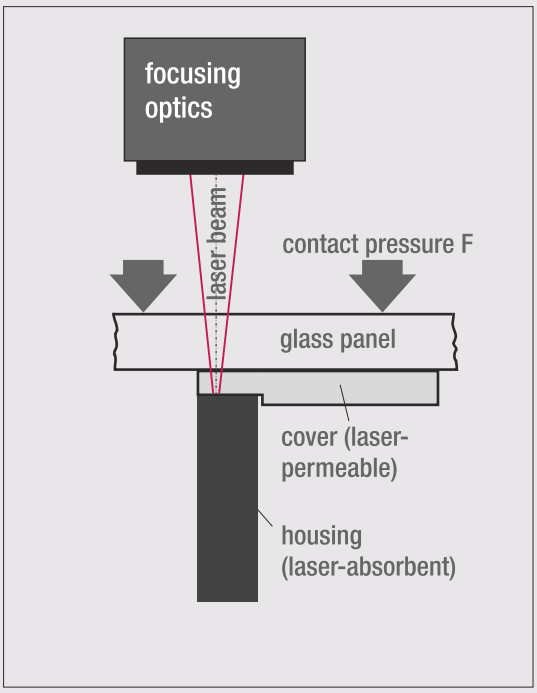

Overlap welding

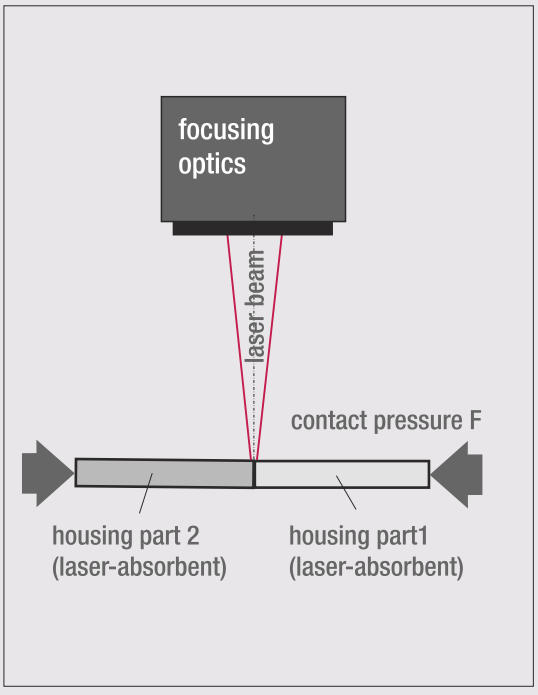

Butt joint welding

Laser plastic welding guarantees tight, high-strength weld seams. The contactless, flexible process enables controlled, localised energy application and generates visually faultless weld seams for decorative surfaces. Weld contours can be programmed and easily integrated in production lines.

Application

Butt joint welding

- cycle time: 3 s per part
- laser output: 28 W

Special dowel (wall plug)

- cycle time: 3,2 s per part
- laser output: 2x50 W

RCD circuit breaker sensor

Overlap welding
Contour welding process

- cycle time: 4 s per part
- laser output: 40 W

Display lamp

- cycle time: 6 s per part
- laser output: 50 W

Housing for actuator

Overlap welding
Quasi-simultaneous process

- cycle time: 4,5 s per part
- laser output: 120 W

Instrument protective glass

- cycle time: 3,6 s per part
- laser output: 200 W

Connector housing

Material Selection

It is always possible to laser-weld:

- all thermoplastics with themselves
- thermoplastic elastomers with thermoplastics and
- different thermoplastics with each other

using the laser transmission method.

The top joining part (facing the laser beam source) must exhibit a low absorption rate for the beam of the laser used. The transmission should be over 60%.

In their raw state, the majority of plastics are laser-permeable. Proportions of fibre glass reduce the laser-permeability.

If the top joining part is to be coloured then appropriate laser-permeable colour pigments must be used.
Realising laser-permeable black colours poses no difficulty.

The bottom joining part should be laser-absorbent.
The laser beam should be able to penetrate up to a maximum 0.3 mm. This is most easily achieved through black colouring with soot pigment.

However, other laser-absorbent colours are also possible. By applying an additive in liquid form, it is possible to make laser-permeable materials laser-absorbent on the surface, so that these are also suitable for welding.

Laser Applications

The laser beam can be applied to the workpiece in various ways:

Contour welding

With this process, a focused laser beam is moved once along the welding line. The size of the focal spot corresponds with the thickness of the welding line. Contour welding places high demands on the evenness of the welding surfaces. The gap must not exceed 0.1 mm. Advantages:

- Low requirements on the beam quality
- Low laser output is sufficient

Simultaneous welding

With this process, the shape of the laser beam is adjusted to the weld seam.

Therefore, the to be welded contour is heated uniformly steadily along the welding line. This process is recommended for geometrically simple welded contours, e.g. lines or circles.

Quasi-simultaneous welding

The focussed laser beam is moved over the welding line in short cycles, so that the entire welding line is heated evenly. If the laser beam moves over scanner mirrors, geometrically complex welding contours are also possible. Advantages:

- Process monitoring possible by measuring the settlement
- Minimal requirements on the welding surfaces due to weld expulsion
- Short process times possible

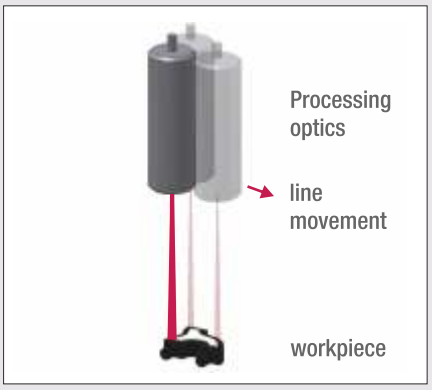

Contour welding

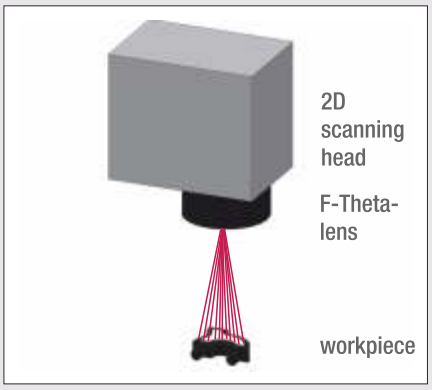

Quasi-simultaneous welding

System Description

Welding of rotation-symmetrical parts

With this process, the workpiece can be rotated in the simplest case. This has the following disadvantages:

- The holder must also rotate
- With in-line systems the workpiece carrier must be rotated.

The Wolf rotating lens (see figure) enables a radially revolving laser beam. The workpiece can be fixed in position.

Optionally, the rotating lens can be fitted for an axially revolving laser beam. The focus point of the laser beam can be adjusted using an adjustable slide.
This enables the welding of workpieces with varying diameters.

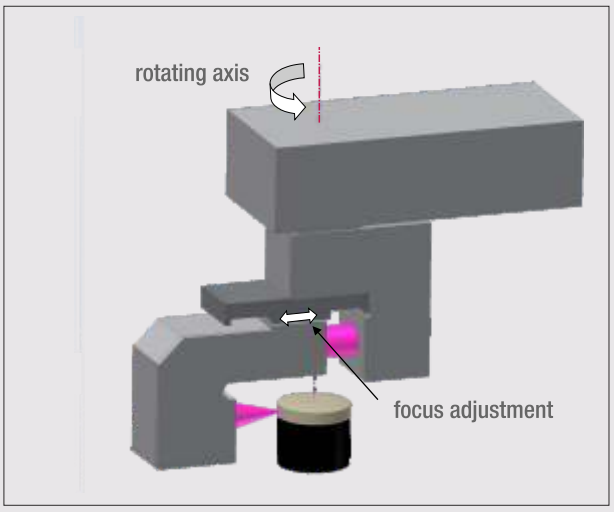

Process Technology

Laser scanner system

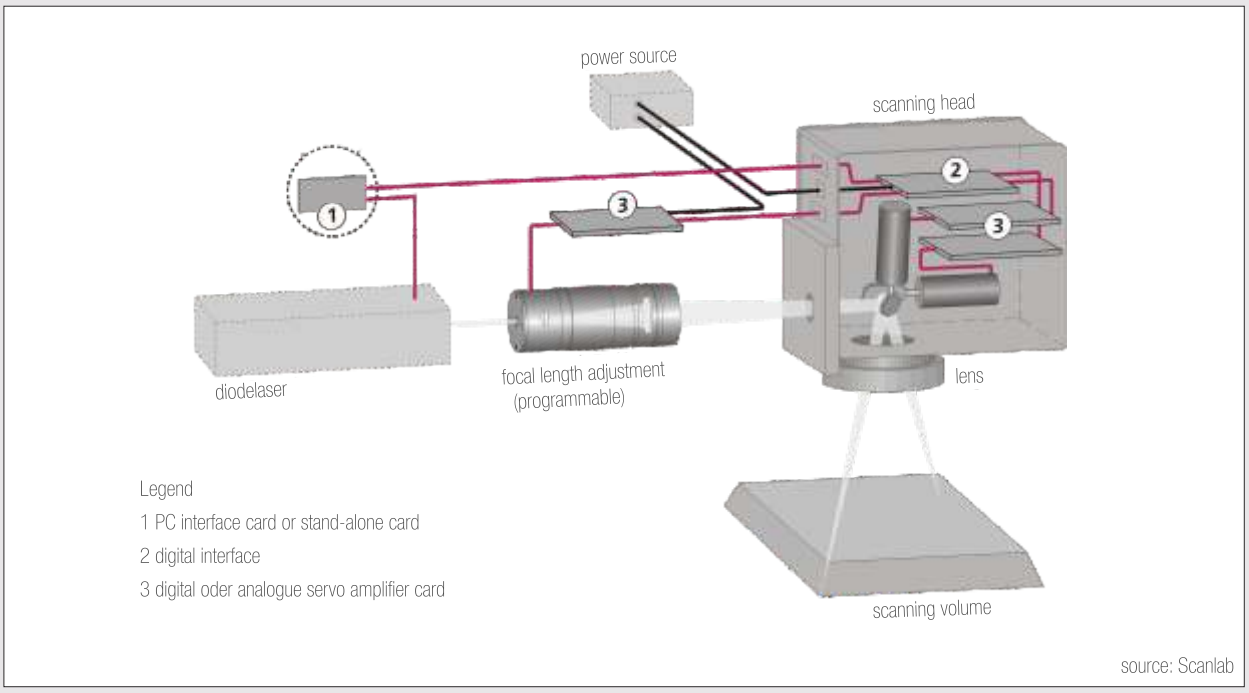

Beam Deflection

Deflection of the laser beam via mirror technology. This enables the welding of rotation-symmetrical parts.

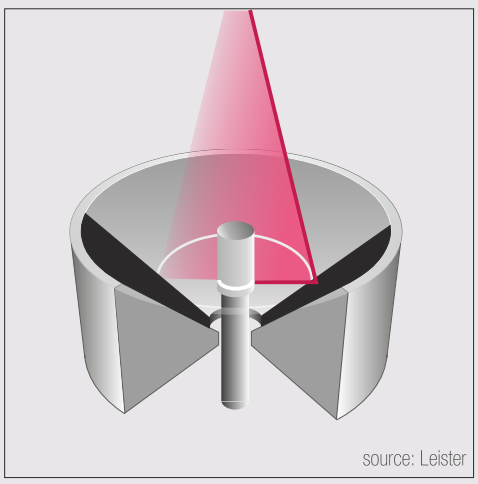

Depending on the workpiece geometry, it is often impossible for the laser beam to reach the joint directly. Through the targeted deflection of the laser beam via mirror technology, covered weld seams can also be reached.

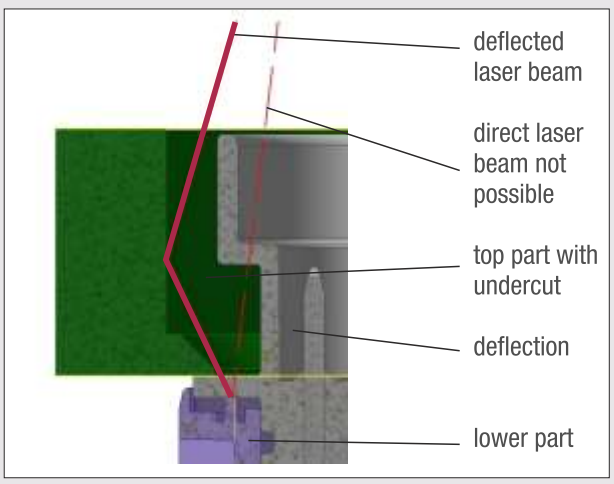

Process Monitoring

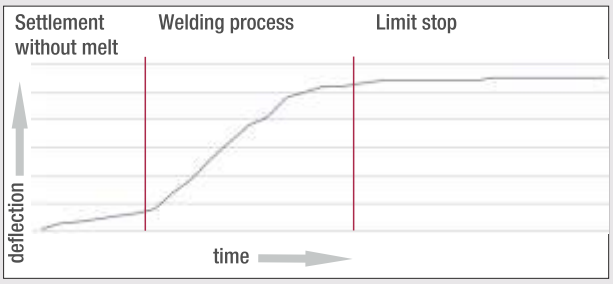

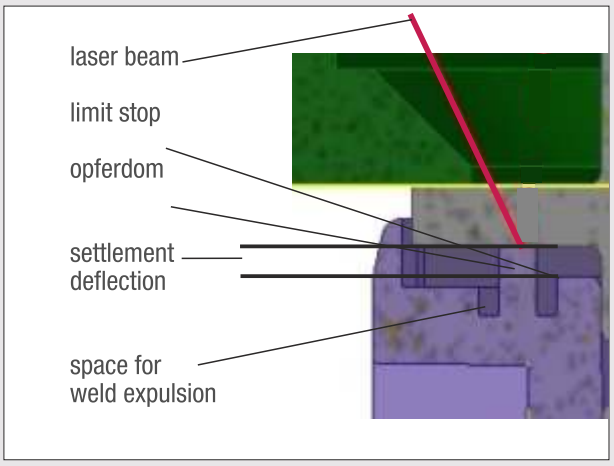

Settlement measurement

- Monitoring of the sinking depth (setting path), only possible with simultaneous and quasi-simultaneous welding
- Check the deflection/time progression via an envelope curve
- Monitoring of the process temperature
- Monitoring of the contact pressure at the weld seam via a digital pressure monitor

Welding Station

The welding stations may be configured differently, depending on the workpieces.
The following characteristics apply on a general basis:

- Stable and precise construction
- Modular technology
- Laser output measurement
- Monitoring of the weld path by distance sensor
- Quick change downholder mask
- Laser scanner height adjustable with slide
- Laser scanner movable in x and y direction (optional)
- Laser scanner with programmable focal length adjustment (optional)

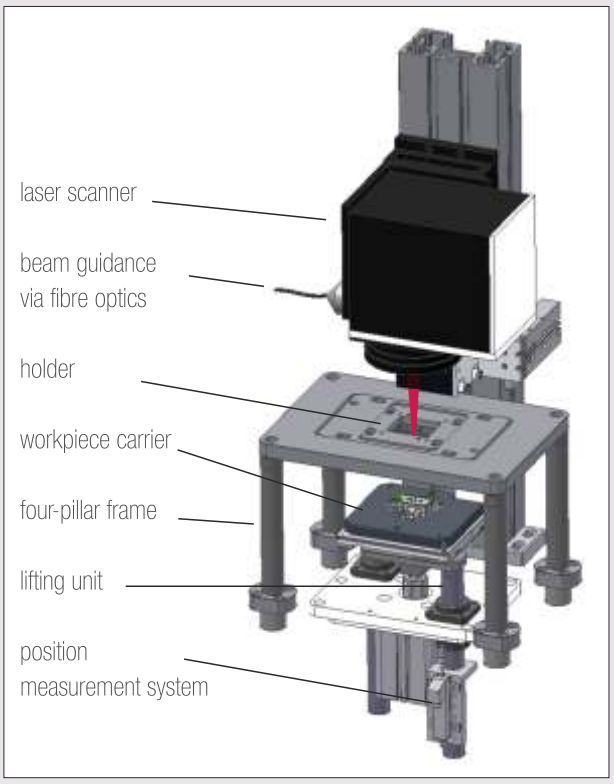

Laser Welding of Metals

Introduction

In electronic and mechatronic modules and products increasingly expanding functional scopes and power densities are required. Miniaturisation is on the increase. It is necessary to design joints - in particular electrical connections - for increasingly high temperatures.

Gluing and soldering are frequently being replaced with welding. It is often necessary to weld different metals here, such as copper with iron. Wolf Produktionssysteme has developed a laser process, with which precise micro-welds are possible.

Typical micro-welding tasks can be divided up into butt joint welding and overlap welding.
In electro-technical products, the workpiece on top (wires, sheet metal strips or connecting legs) often exhibit a significantly smaller cross-section than the part beneath.
It is therefore possible to differentiate between three principle arrangements of the workpieces (see figure on the right).

The workpieces to be welded frequently consist of copper, brass (CuZn) or steel.

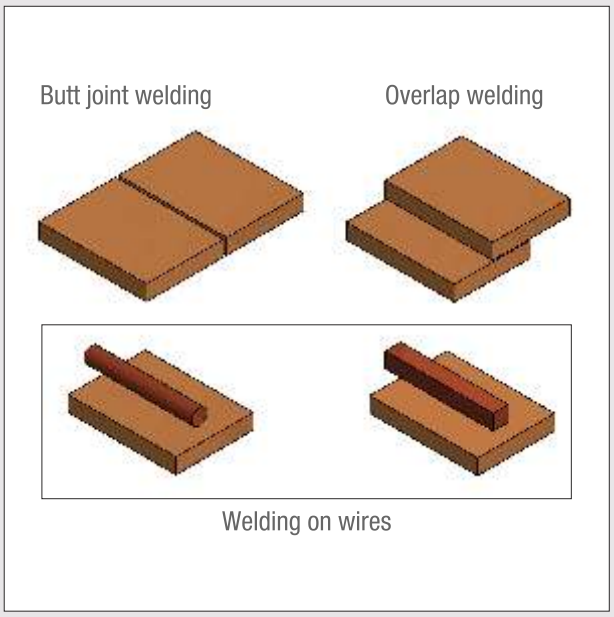

Joint geometries

Principle

The workpiece is heated rapidly at the welding point due to the impact of the laser beam energy.

A melt zone is produced, which exhibits a width to depth ratio of roughly 1:1. This process is referred to as heat conduction welding.

With higher energy densities, deep welding is possible.
With the impact of the laser beam, a vapour capillary forms; the so-called “keyhole”.

This enables deep welding, whereby the depth of the melt zone is many times the width.

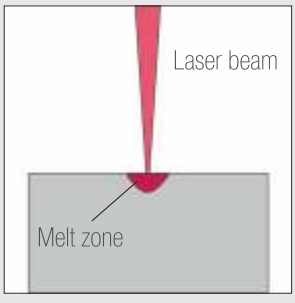

Heat conduction welding

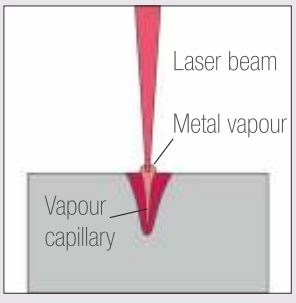

Deep welding

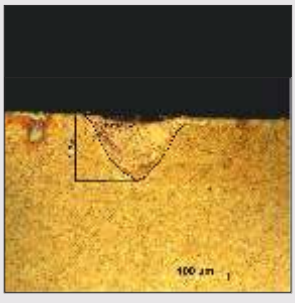
Melt zone (Microsection)

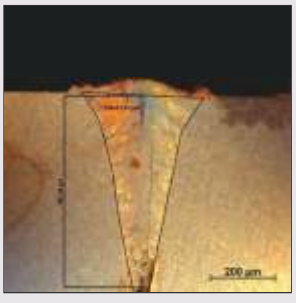
Melt zone (Microsection)

Application

With automatic micro-welding with a laser beam, it is necessary to take the following requirements into account:

- With butt joint welding, the beam must hit the gap precisely.
- The gap should not exceed 10% of the focus diameter. A zero-gap is ideal.
- The absorption of the laser beam fluctuates significantly with copper, depending on the condition of the surface.
- A defined diameter of the welding zone must be ensured.
- A sufficient welding depth must be ensured.
- The welding process should be monitored, in order to safeguard the reproducibility and avoid faults.

- cycle time: 0,7 s per Part
- laser output: 80 W

Pressure sensor

- cycle time: < 2 s per part
- laser output: 1800 W
- pulse duration: 10 ms

Magnetic core

- cycle time: < 1 s per part
- laser output: 4600 W
- pulse duration: 11 ms

Yoke plate

System Description

Wolf Produktionssysteme has developed solutions for these requirements and integrated the necessary process technology in a production machine.

The core of the machine is the welding tool LSW01 with processing optics, which is positioned relative to the work-pieces with the aid of NC rotation and linear axes.
A quasi-CW fibre laser with a wavelength of 1064 nm serves as laser source. With a CW output of 300W and a pulse peak power of 3 kW, the laser is also sufficiently dimensioned for rather more “coarse” tasks. The laser beam reaches the processing optics via fibre optics.

For the precise positioning of the laser beam, position detection of the workpiece and corresponding position correction are performed with an image processing system. The high resolution CCD camera required for this has been integrated in the beam path of the processing optics.

Furthermore, the processing optics are equipped with water cooling, which is required with high laser outputs.

In order to minimise soiling, the welding tool is equipped with a so-called air knife; a sharp air flow that prevents welding fumes and particles depositing on the cover glass.

In order to realise the desired width of the welding zone, the welding tool is equipped with a pendulum mechanism. With this, the laser beam can be arbitrarily deflected in the x and y direction.

It typically follows a circular path with a programmable diameter of max. 1 mm.

With micro-welding, the deflection needed tends to lie within a range of 0.1 to 0.2 mm. The frequency of the deflection is programmable between 5 and 50 Hz.

Process Technology

In order to enable a high and reproducible welding depth, both a high pulse power and a defined pulse duration are required. The fibre laser used has been designed for this. Despite these possibilities, the unfavourable absorption behaviour of copper materials leads to unacceptable fluctuations in the welding depth. Due to the variable pulse power over the pulse duration - so-called pulse shaping - a consistently high welding depth can also be achieved with copper.
The monitoring systems familiar with macro-welding cannot be applied with micro-welding, so that there is no real-time monitoring. However it is possible to draw important conclusions regarding the welding process and quality with an infra-red camera. To this end, the local temperature profile and temperature course during cooling can be evaluated after welding.
Spot and path welding are both possible with the welding tool developed.

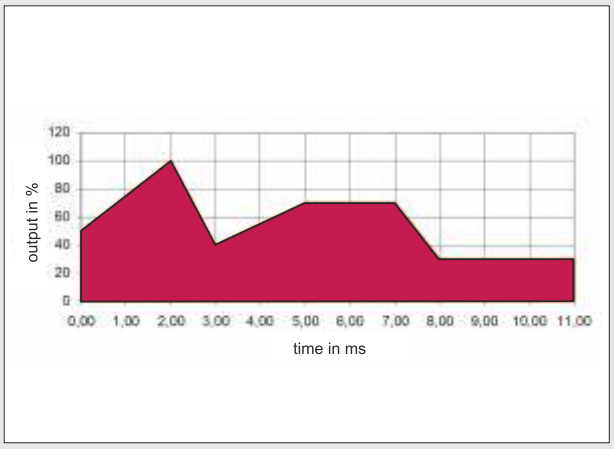

Example of pulse shaping

Laser Welding Tool

Kinematic processing optics with camera for position correction

Laser Marking

Introduction

Laser marking is a thermal process, in which an energy-rich beam of focussed laser light is used to alter the surface or inside of a transparent material. This requires that the material absorbs the laser light with a certain wavelength, in order that its appearance may be changed.
Viewed from a practical perspective, a laser is a beam source that transmits a tightly bundled light beam.

This laser light is characterised by a high power density and a wavelength characteristic of the respective laser type.

The high power density with a small focal spot is of particular significance with laser marking in particular.
It is fundamentally possible to differentiate between

- directly marking a material and
- marking an inscription label.

For cost reasons, direct marking is often preferred. However, the technological requirements applicable to the marking process are significantly higher here than with inscription labels, which are designed for laser marking.

Principle

Material removal

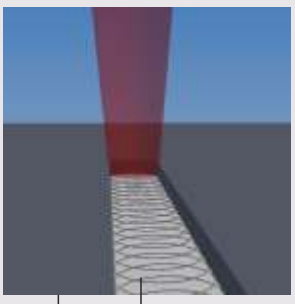

base material (reflective)

top coat (absorbent)

Coated materials can be marked by removing the top coat with the laser. When removing the top coat of coated (e.g. anodised layers) or painted metals, the laser beam does not interact with the base material but essentially with the top coat. It is reflected by the base material.

Multi-layered plastics can be marked by removing a thin top coat. A typical example of paint removal is the day/night design of controls.

Material transformation

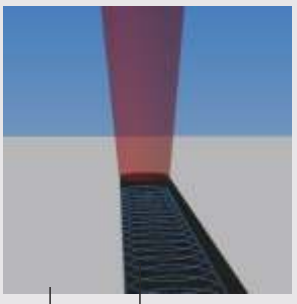

transformed material (colour)

base material (absorbent)

Metals, ceramics and some plastics can be engraved with the laser.
During this process, the power density of the laser beam is so high that the material is partially vaporised during processing within just a few nanoseconds.

A recess - the engraving - is produced in the material. However, the removal of material often also changes the colour and structure of the surface, which makes the engraving more visible.

Application

Marking plastic through the removal of the top coat (day/night design).

Marking plastic through carbonizing.

Marking metals through the generation of annealing colours.

Marking aluminium through the removal of the top coat.

Marking signs, with yellow surfaces in this case.

Marking die-cast aluminium through the removal of the anodised layer and conversion of the surface.

Marking circuit boards through the exposure of the conductor tracks.

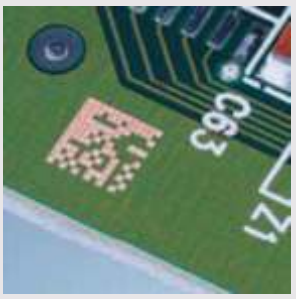

Marking circuit boards through the removal of the solder resist.

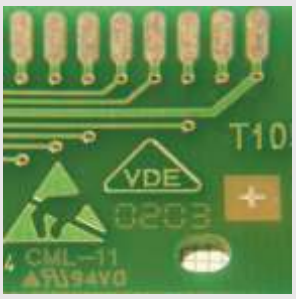

Laser Application

Laser marking systems comprise four significant components:

- Laser source
- Beam deflection system (laser scanner with F-Theta lens)
- Control with operating software
- Machine technology

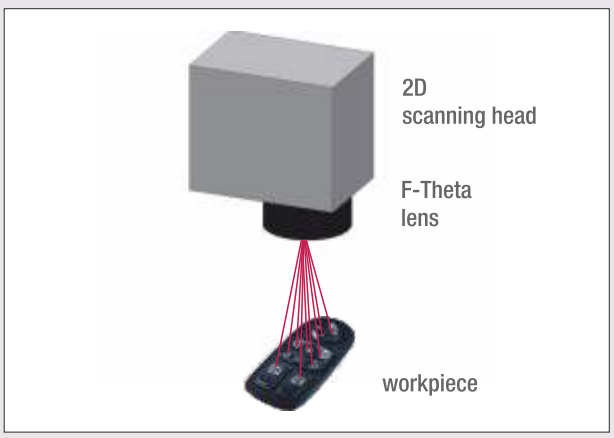

System Description

Two laser types are available from Wolf Produktionssysteme for laser marking:

- Fibre laser (wavelength 1064 nm)
- CO^2 laser (wavelength 10640 nm)

Lasers with a wavelength of 1064 nm have the broader application range.
With this wavelength it is also possible to mark metals.

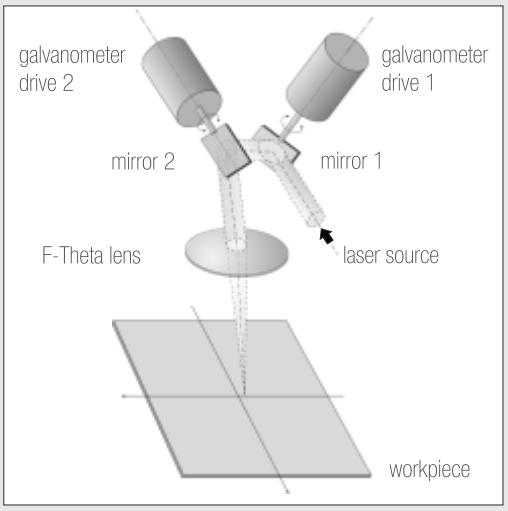

Fibre laser

Modern fibre lasers are particularly well suited for marking tasks. The advantages are:

- longevity
- high beam quality
- low maintenance requirements
- economical
- pulse-width modulation possible

Fibre lasers are pumped with particularly long-lasting single emitter diodes.

Ytterbium fibre laser (IPG)

CO^2 lasers

CO^2 lasers are not suited for metals.
However, the lower price and lower maintenance requirements make this type of laser attractive for marking plastics, which fully absorb the laser output at a wavelength of 10640 nm.

This even applies to acrylic glass, which appears transparent to the human eye.
Wolf marking systems use CO^2 lasers from the market leader Synrad.

CO^2 laser (Synrad)

Process Technology

Laser scanner system

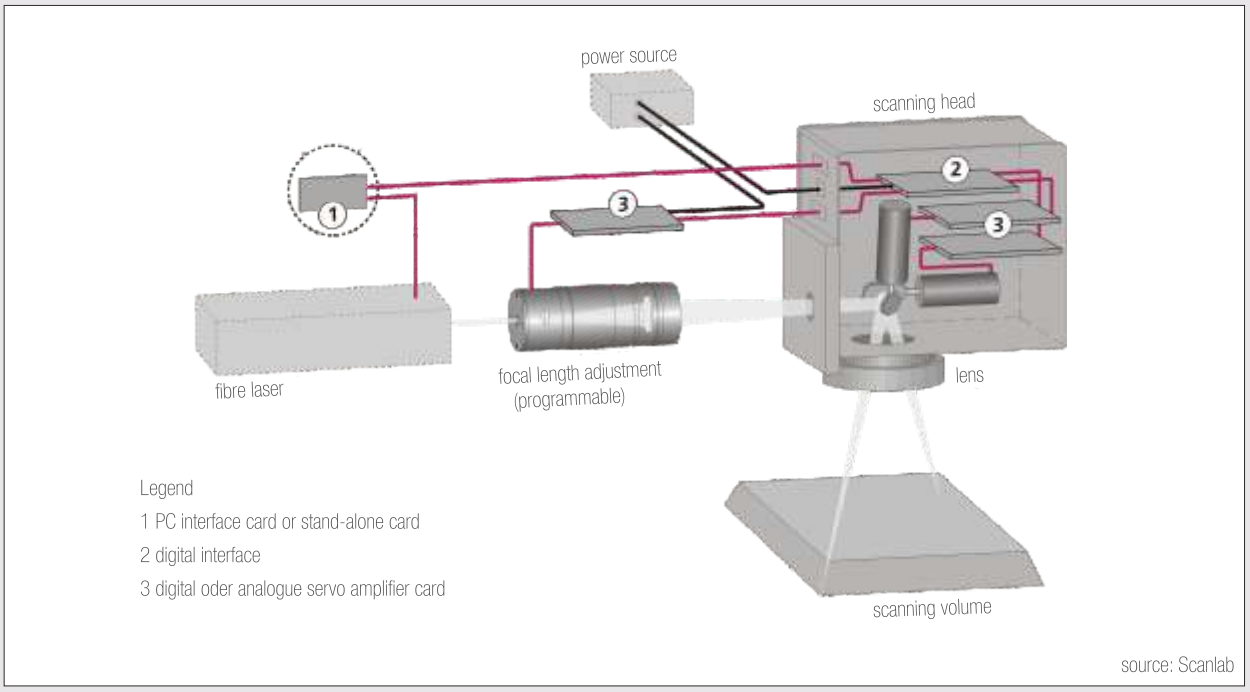

source: Scanlab

Controller

Wolf laser marking machines are controlled by an industrial PC with Siemens Soft PLC. This PC is also responsible for controlling the laser scanner.
The controller architecture enables integration in a wide range of environments. With this, additional automatic functions can be actuated where applicable.

The significant controller components communicate with each other via

- Ethernet or
- PROFIBUS

The controller can therefore easily expanded.

Software

All Wolf laser marking systems work with the SCAPS scanner application software “SamLight”. It is:

- proven and user-friendly
- convenient, flexible and versatile
- CAM/CAD data acquisition is possible

It is equipped with:

- tools for DataMatrix and Barcode

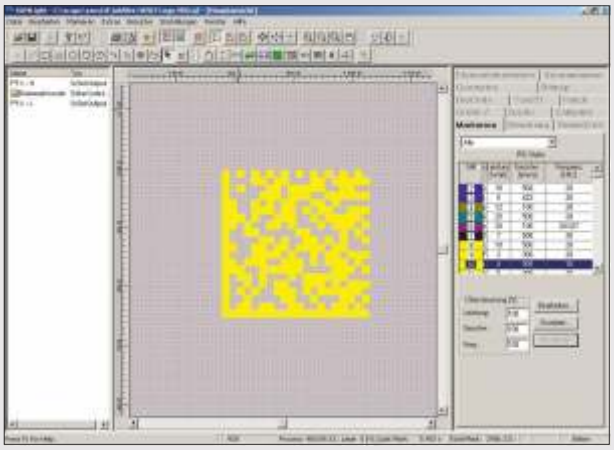

Process Verification

Tec Centre

The Tec Centre contains all of the test machines required to perform tests and analyses in relation to your laser processing tasks.

It has been expanded to include a lab for scientific materials testing and material analysis of welded connections.

For Wolf, process development and process verification are a service that must precede the construction of machines and systems. Only in this way process responsibility can be assumed. If necessary, pre-series production can take place.

Workpieces can be cleanly cut with a high degree of accuracy, using a precision cutting machine.

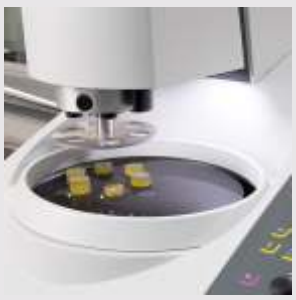

Sections can be produced with the aid of a grinding and polishing system.

Equipment to etch the surface is also available, in order to make crystalline structures visible.

A stereomicroscope with 20-times zoom enables the macroscopic investigation of soldering joints and welded connections.
For the material analysis, sections are analysed with the aid of a metallographic microscope with 1000-times zoom, enabling an examination of the joint of soldered and welded connections.

More comprehensive sampling can be realised and is offered as a service.

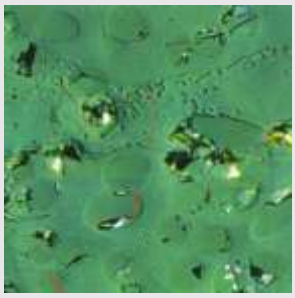

Plastic weld seam

QR code marking

Weld seam of plastic with glass-fibre

Metal welded connection

Machine Technology

The process technology of individual laser processing methodes can be integrated in customised machines. Two platforms are available from Wolf.

SkyLine®

The automation platform SkyLine forms the basis from stand-alone systems right through to complete transfer lines, consisting of multiple production modules (automatic modules or manual workstations)
Production modules may comprise several modular stations, which can be designed as quick-change stations if desired. The hardware and software structure is also logically standardised. SkyLine stands firmly for both:

- Retooling flexibility
- Conversion flexibility

The typical workpieces for which SkyLine was developed fit inside a shoe box, have high quality requirements and are produced in large unit quantities of > 200,000.

Automatic Module (cell) AM100

Workpiece Feeding

Alternative load-unload options are possible for SkyLine automatic modules (cells). The workpieces can be placed manually in the working area as follows:

- drawers, motor-driven
- rotary indexing table, motor-driven

The workpieces are transported in the assembly lines on workpiece carriers. These are driven in and out of the cells

- in-line

on a twin belt conveyor.

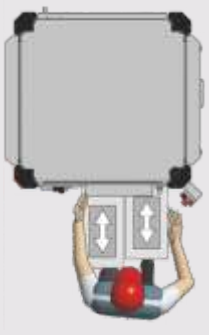

pendulum drawers

rotary indexing table

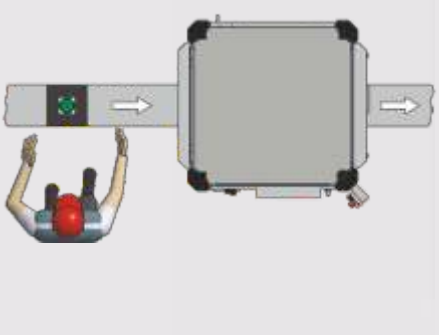

in-line

Dimensions

SkyLine is flexibility with system.
The standardised machine technology offers a range of size options, enabling the selection of widths from 750 mm to 2200 mm and depths from 1000 mm to 2200 mm.
With this flexible module, it is possible to realise tailored custom machines.

The process technology for the majority of laser processing methodes can be accommodated in an AM 100 cell with a width of 1000 mm and a depth of 1000 mm.

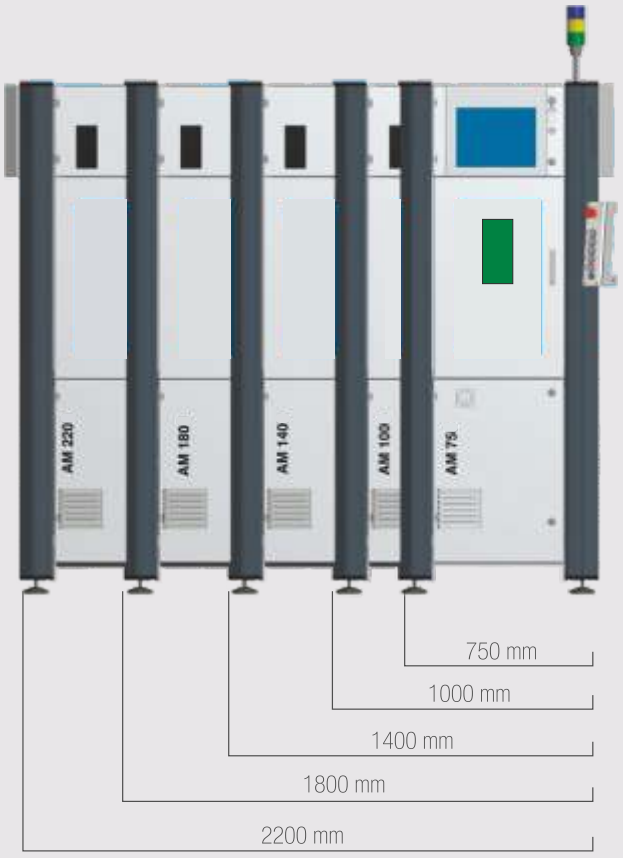

Technical Data

Power supply	3x230/400 V, 16 A (32A)
Compressed air supply	6 bar

Controller

Industrial PC

Mainboard	Kontron KTQ 67/ATX-E
Processor	Intel Core i5-2400(4x3.1 GHz)
	Base LGA 115
RAM	1 x 4 GB DDR3
Hard disk	2 x 80 GB, 2.5“ SSD
	with automatic data backup
Operating system	Windows 7 Pro Embedded
	Multilingual

Programmable logic controller

Type	Simatic WinAC RTX 2010
	(soft-PLC)

Mobile Axes

Type	Wolf SkyLine
Drive	Servomotor with encoder
	(Rexroth)
	ball screw or belt drive
Drive control device	HCS01-1E-...(Rexroth)
Guides	THK

Pneumatics

Valve cluster	FESTO CPV 10
Maintenance unit	MS4-1/4" with pressure monitor

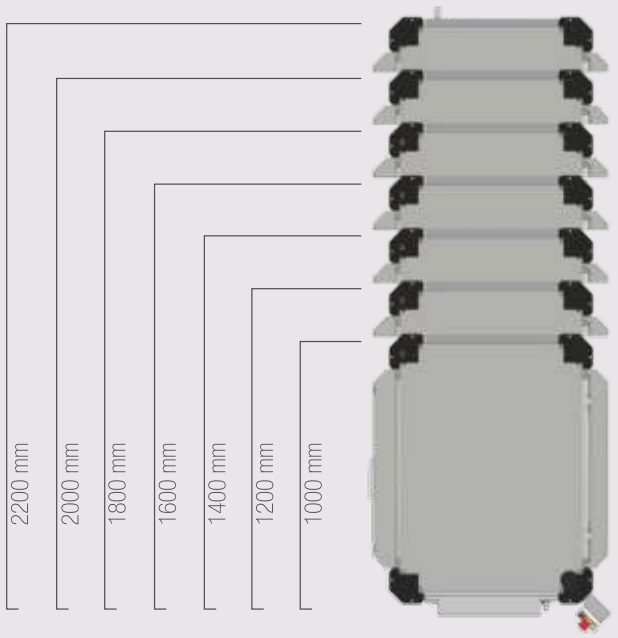

BoxLine®

BoxLine encompasses compact, economical machines. They are particularly well suited for “Low Cost Intelligent Automation” projects.

With the economical machines, it is possible to combine automatic processes and manual tasks.

The compact and slimline machines are equally suited for single workstations and assembly islands, so-called U-lines.

BoxLine Production Module

Service concept

BoxLine machines are designed for utilisation around the world, in particular also in low-wage countries. Thanks to the transport box supplied - which can be used for air, land and sea freight - it is possible to package and dispatch the machine quickly.

This enables service, such as maintenance or retooling, to take place at the Wolf Produktionssysteme factory. The machine travels, rather than costly personnel. Effective and economical. We guarantee rapid service. After 24 hours, the machine is back in its transport box and on its return journey.

Workpiece Feeding

The workpieces can be placed manually in the working area as follows:

- one drawer
- one drawer (chaku-chaku) with separate insertion and removal position. The workpiece is automatically transferred in the machine.
- two pendulum drawers

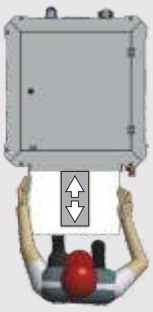

one drawer

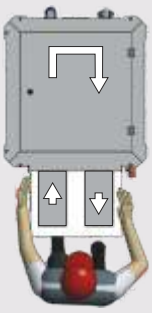

one drawer (chaku-chaku)

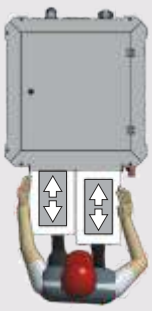

two pendulum drawers

Technical Data

Power supply	230 V, 16 A
Compressed air supply	6 bar

Controller

Industrial PC	
Mainboard	Kontron KTQ 67/ATX-E
Processor	Intel Core i5-2400 (4x3.1 GHz), base LGA 115
RAM	1x 4 GB DDR3
Hard disc	2 x 80 GB, 2.5" SSD with automatic data backup
Operating system	Windows 7 Pro Embedded Multilingual
Programmable logic controller	
Type	Simatic WinAC RTX2010 (soft-PLC)

Mobile Axes

Type	Wolf SkyLine
Drive	Servomotor with encoder (Rexroth) ball screw
Drive control device	HCS01-1E-...(Rexroth)
Guides	THK

Pneumatics

Valve cluster	FESTO CPV 10
Maintenance unit	MS4-1/4" with pressure motor

Dimensions

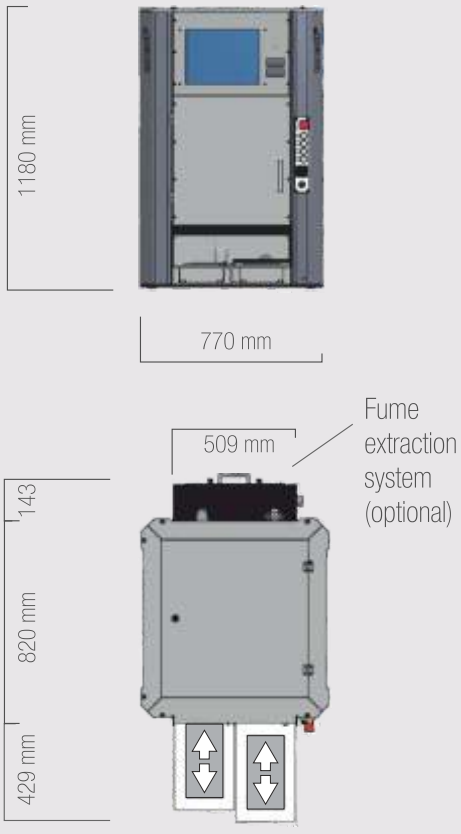

Service

Bevore Handover

SkyLine and BoxLine machines are highly standardised.
Each standard component is subjected to extensive endurance tests. Before handover to the customer, all Wolf machines run through the following steps:

- Check of completion (according to a checklist)
- 8 h endurance test
- Pre-acceptance test in-house together with the customer
- Machine set-up and training on the customer's site (minuted)

Lifetime Maintenance

We undertake to perform competent service anywhere in the world.
The Wolf quality standard includes a maintenance contract that is offered for every machine.
In this way, you ensure the operational readiness of the production system supplied by us. With the Wolf maintenance contract, expanded customer service is available to you:

- 24 h hotline
- Teleservice via internet
- 24 h collection of spare parts possible
- Monitoring of the maintenance intervals

Industry 4.0

All Wolf machines are equipped with an industrial PC for control. The hardware is therefore suitable for data exchanges with all relevant systems in the customer's data environment.

The connection of Wolf machines with higher-level systems has been realised in numerous projects.

Existing software modules, know-how and experience ease integration in the data environment.

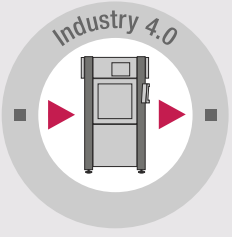

Your Task

Our Quotation

We apprehend your task, verify the tests performed and develop alternative concepts on this basis.

Based on our experience, our expertise and available calculations - the data of which are stored and accessible - we generate a binding quotation.

Detailed, precisely calculated and fast. An accurate basis for your investment decision.

Distribution Partners

France (Frankreich)
Orion Industry
Z.A. 16 Chemin de la Guy, 91160 Ballainvilliers, France
Tel. +33 1 693 453 11, Fax +33 1 690 931 83
www.orion-industry.com, info@orion-industry.com

Spain (Spanien)
BIELEC Barcelona Instruments Electrònics, SL
Rosellón, 20, 08029 Barcelona, España
Tel +34 932 802 989, Fax +34 932 804 113
www.bielec.es, info@bielec.es

Czech Republic (Tschechien)
MP Elektronik Technologie, s.r.o.
Dlouhá 219, 678 01 Blansko - Klepačov
Česká Republika
Tel +42 0 516 416 937, Fax +42 0 516 417 641
www.mpelektronik.cz, info@mpelektronik.cz

wolf
PRODUKTIONSSYSTEME

Wolf Produktionssysteme GmbH & Co.KG
Robert-Bürkle-Str. 6, 72250 Freudenstadt, Germany
Tel +49(0)7441-8992-0, Fax +49(0)7441-8992-22
www.wolf-produktionssysteme.de
info@wolf-produktionssysteme.de